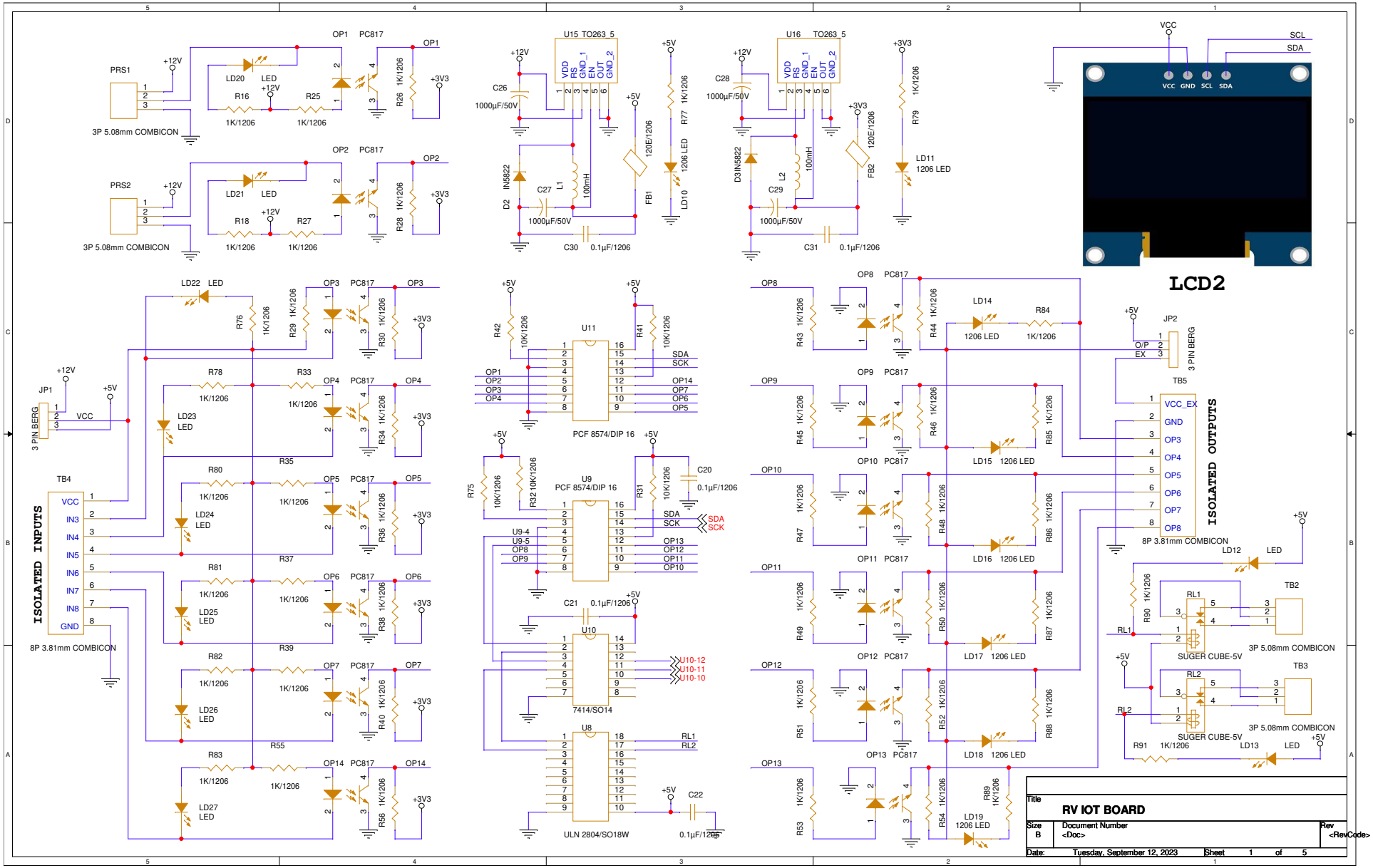
PRS1
3P 5.08mm COMBICON
PRS2
3P 5.08mm COMBICON
OP1 PC817
OP2 PC817
LD20 LED
LD21 LED
R16 1K/1206
R25 1K/1206
R18 1K/1206
R27 1K/1206
R26 1K/1206
R28 1K/1206
+12V
+3V3
U15 TO263_5
U16 TO263_5
VDD
RS
GND_1
EN
OUT
GND_2
C26 1000µF/50V
C27 1000µF/50V
C28 1000µF/50V
C29 1000µF/50V
C30 0.1µF/1206
C31 0.1µF/1206
D2 IN5822
D3 IN5822
L1 100mH
L2 100mH
FB1 120E/1206
FB2 120E/1206
R77 1K/1206
LD10 1206 LED
R79 1K/1206
LD11 1206 LED
VCC
SCL
SDA
GND
LCD2
ISOLATED INPUTS
JP1
3 PIN BERG
TB4
VCC
IN3
IN4
IN5
IN6
IN7
IN8
GND
8P 3.81mm COMBICON
LD22 LED
LD23 LED
LD24 LED
LD25 LED
LD26 LED
LD27 LED
R76 1K/1206
R78 1K/1206
R80 1K/1206
R81 1K/1206
R82 1K/1206
R83 1K/1206
R29 1K/1206
R33 1K/1206
R35
R37
R39
R55
R30 1K/1206
R34 1K/1206
R36 1K/1206
R38 1K/1206
R40 1K/1206
R56 1K/1206
OP3 PC817
OP4 PC817
OP5 PC817
OP6 PC817
OP7 PC817
OP14 PC817
U11
PCF 8574/DIP 16
U9
PCF 8574/DIP 16
U10
7414/SO14
U8
ULN 2804/SO18W
R42 10K/1206
R41 10K/1206
R75 10K/1206
R32 10K/1206
R31 10K/1206
C20 0.1µF/1206
C21 0.1µF/1206
C22 0.1µF/1206
SDA
SCK
OP1
OP2
OP3
OP4
OP14
OP7
OP6
OP5
OP13
OP10
U9-4
U9-5
OP8
OP9
U10-12
U10-11
U10-10
RL1
RL2
OP8 PC817
OP9 PC817
OP10 PC817
OP11 PC817
OP12 PC817
OP13 PC817
R43 1K/1206
R44 1K/1206
R45 1K/1206
R46 1K/1206
R47 1K/1206
R48 1K/1206
R49 1K/1206
R50 1K/1206
R51 1K/1206
R52 1K/1206
R53 1K/1206
R54 1K/1206
R84 1K/1206
R85 1K/1206
R86 1K/1206
R87 1K/1206
R88 1K/1206
R89 1K/1206
LD14 1206 LED
LD15 1206 LED
LD16 1206 LED
LD17 1206 LED
LD18 1206 LED
LD19 1206 LED
JP2
O/P
EX
3 PIN BERG
TB5
VCC_EX
GND
OP3
OP4
OP5
OP6
OP7
OP8
8P 3.81mm COMBICON
ISOLATED OUTPUTS
LD12 LED
LD13 LED
R90 1K/1206
R91 1K/1206
TB2
TB3
3P 5.08mm COMBICON
SUGER CUBE-5V
Title
RV IOT BOARD
Size B
Document Number
<Doc>
Rev
<RevCode>
Date: Tuesday, September 12, 2023
Sheet 1 of 5

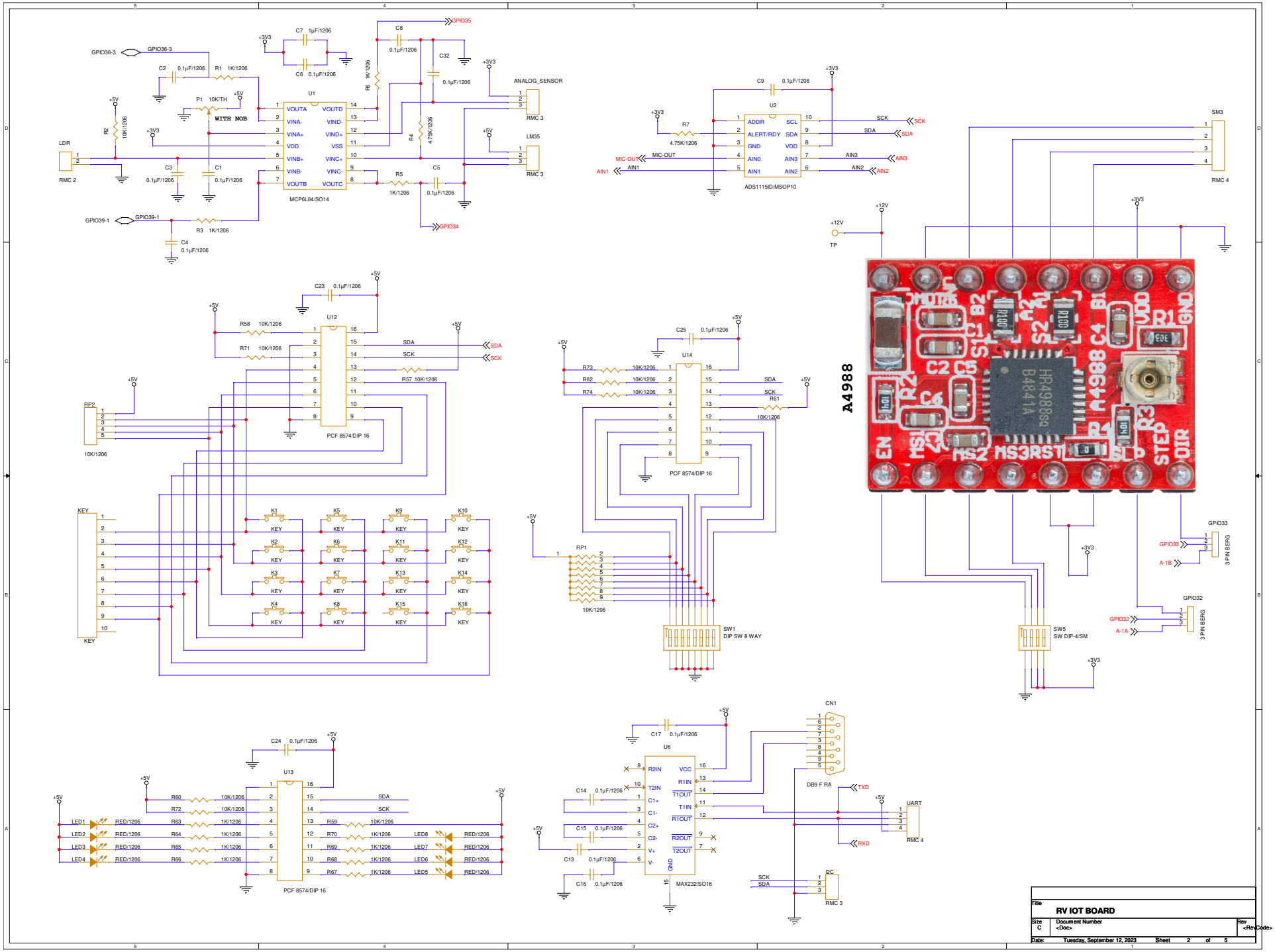
U1
MCP6L04/SO14
VOUTA
VINA-
VINA+
VDD
VINB+
VINB-
VOUTB
VOUTD
VIND-
VIND+
VSS
VINC+
VINC-
VOUTC
P1 10K/TH
WITH NOB
LDR
RMC 2
GPIO36-3
GPIO39-1
GPIO35
GPIO34
ANALOG_SENSOR
RMC 3
LM35
U2
ADS1115ID/MSOP10
ADDR
ALERT/RDY
GND
AIN0
AIN1
SCL
SDA
VDD
AIN3
AIN2
MIC-OUT
SCK
SM3
RMC 4
TP
+12V
A4988
EN
MS1
MS2
MS3
RST
SLP
STEP
DIR
GND
GPIO33
GPIO32
3 PIN BERG
SW5
SW DIP-4/SM
U12
PCF 8574/DIP 16
RP2
10K/1206
KEY
U14
RP1
SW1
DIP SW 8 WAY
U13
LED1
LED2
LED3
LED4
LED5
LED6
LED7
LED8
U6
MAX232/SO16
R2IN
T2IN
C1+
C1-
C2+
C2-
V+
V-
VCC
R1IN
T1OUT
T1IN
R1OUT
R2OUT
T2OUT
CN1
DB9 F RA
TXD
RXD
UART
I2C
Title
RV IOT BOARD
Size
C
Document Number
<Doc>
Rev
<RevCode>
Date:
Tuesday, September 12, 2023
Sheet
2
of
5

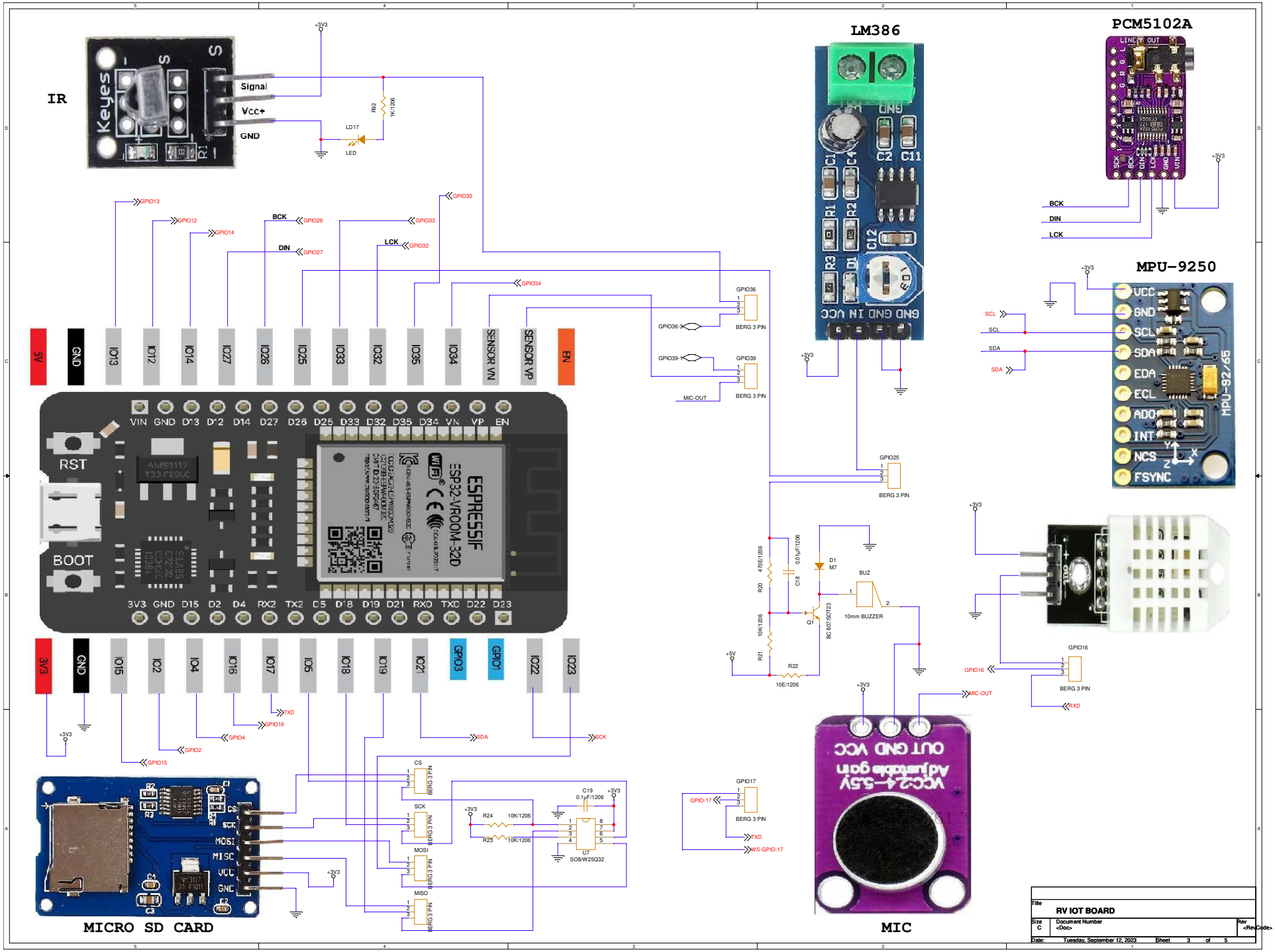
IR
Keyes
Signal
Vcc+
GND
LM386
PCM5102A
BCK
DIN
LCK
MPU-9250
VCC
GND
SCL
SDA
EDA
ECL
ADO
INT
NCS
FSYNC
MPU-9250
5V
GND
IO13
IO12
IO14
IO27
IO26
IO25
IO33
IO32
IO35
IO34
SENSOR VN
SENSOR VP
EN
VIN GND D13 D12 D14 D27 D26 D25 D33 D32 D35 D34 VN VP EN
RST
BOOT
AMS1117
ESPRESSIF
ESP32-VROOM-32D
3V3 GND D15 D2 D4 RX2 TX2 D5 D18 D19 D21 RXO TXO D22 D23
3V3
GND
IO15
IO2
IO4
IO16
IO17
IO5
IO18
IO19
IO21
GPIO3
GPIO1
IO22
IO23
GPIO36
GPIO39
BERG 3 PIN
MIC-OUT
GPIO25
GPIO16
GPIO17
GPIO-17
WS-GPIO-17
BUZ
10mm BUZZER
BC 807/SOT23
MICRO SD CARD
CS
SCK
MOSI
MISO
SO8/W25Q32
MIC
VCC:2.4~5.5V
Adjustable gain
OUT GND VCC
Title
RV IOT BOARD
Size
C
Document Number
<Doc>
Rev
<RevCode>
Date:
Tuesday, September 12, 2023
Sheet
3
of
5

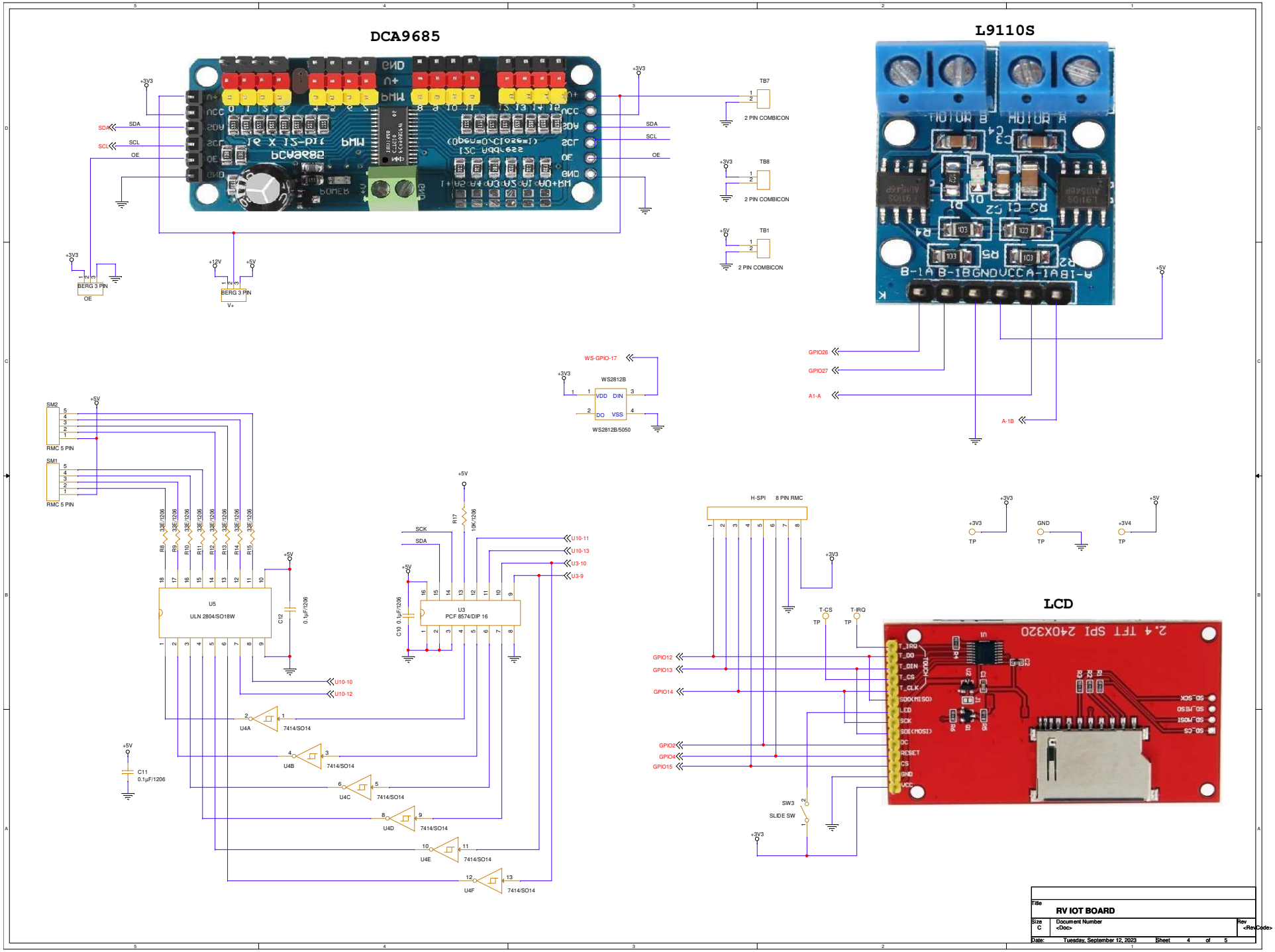

Title	RV IOT BOARD		
Size C	Document Number <Doc>		Rev <RevCode>
Date: Tuesday, September 12, 2023	Sheet 4 of 5		

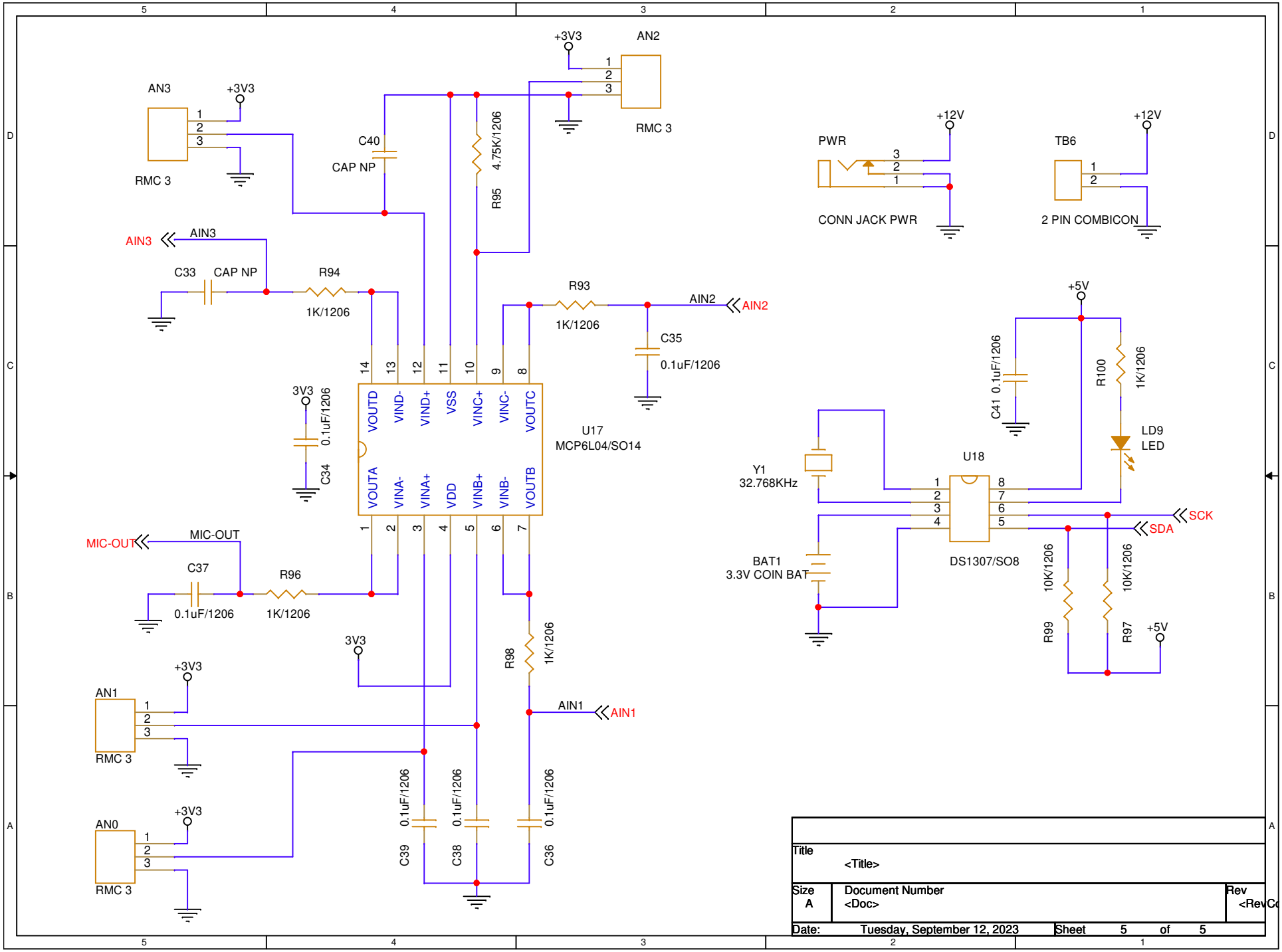
AN3
+3V3
RMC 3
C40
CAP NP
R95
4.75K/1206
+3V3
AN2
RMC 3
AIN3
AIN3
C33
CAP NP
R94
1K/1206
R93
1K/1206
AIN2
AIN2
C35
0.1uF/1206
3V3
C34
0.1uF/1206
VOUTD
VIND-
VIND+
VSS
VINC+
VINC-
VOUTC
VOUTA
VINA-
VINA+
VDD
VINB+
VINB-
VOUTB
U17
MCP6L04/SO14
MIC-OUT
MIC-OUT
C37
0.1uF/1206
R96
1K/1206
3V3
R98
1K/1206
AIN1
AIN1
+3V3
AN1
RMC 3
+3V3
AN0
RMC 3
C39
0.1uF/1206
C38
0.1uF/1206
C36
0.1uF/1206
PWR
+12V
CONN JACK PWR
TB6
+12V
2 PIN COMBICON
+5V
C41
0.1uF/1206
R100
1K/1206
LD9
LED
U18
Y1
32.768KHz
BAT1
3.3V COIN BAT
DS1307/SO8
SCK
SDA
R99
10K/1206
R97
10K/1206
+5V
Title
<Title>
Size
A
Document Number
<Doc>
Rev
<RevCo
Date:
Tuesday, September 12, 2023
Sheet
5
of
5